ES-23207-000
SHT 1.1

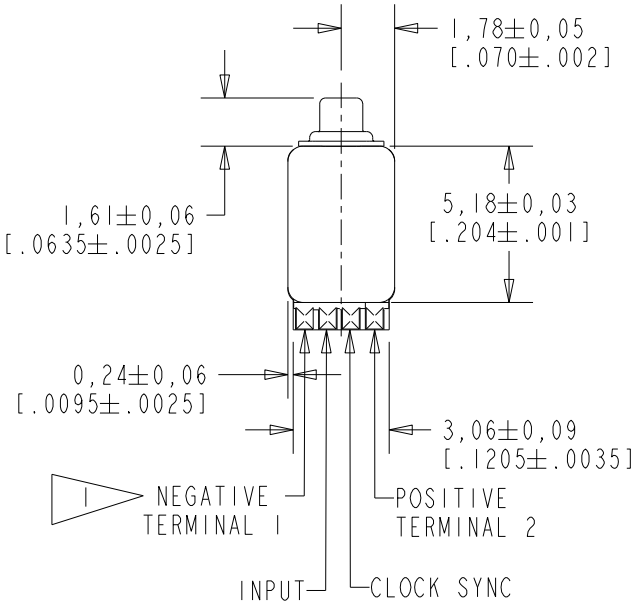

NOTE:
1 A POSITIVE GOING VOLTAGE AT THE INPUT TERMINAL CAUSES A DECREASE IN PRESSURE AT THE SOUND OUTLET.

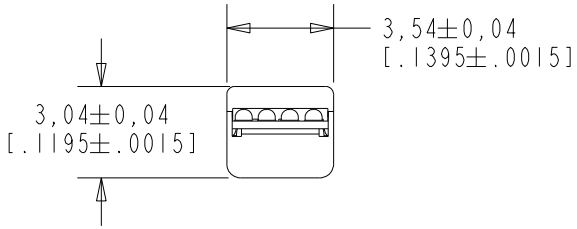

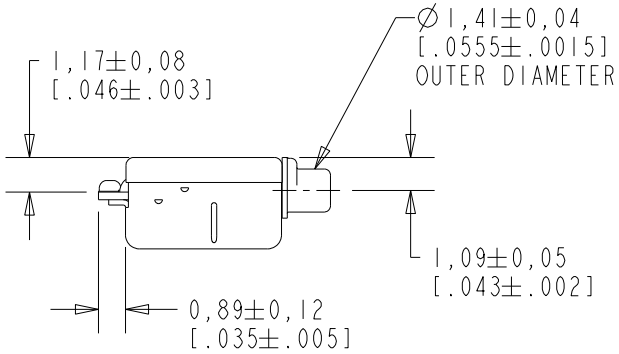

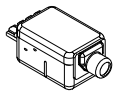

SCALE 2:1
NOMINAL WEIGHT
.23 GRAMS

DIMENSIONS IN MILLIMETERS [INCHES]

Revision	C.O. #	Implementation Date	RELEASE LEVEL	REVISION
			Active	D
D	P10001062	12-19-16		

KNOWLES CORPORATION

SCALE: 4:1		DR. BY AB	DATE 12-15-05
DO NOT SCALE DRAWING		CK. BY GJP	DATE 12-21-05
TITLE: RECEIVER OUTLINE DRAWING	ES-23207-000 SHT 1.1	APP. BY GJP	DATE 12-21-05

KE111ASIZE.FRM Rev: B

TYPE III DAMPING	ES-23207-000 SHEET 2.1

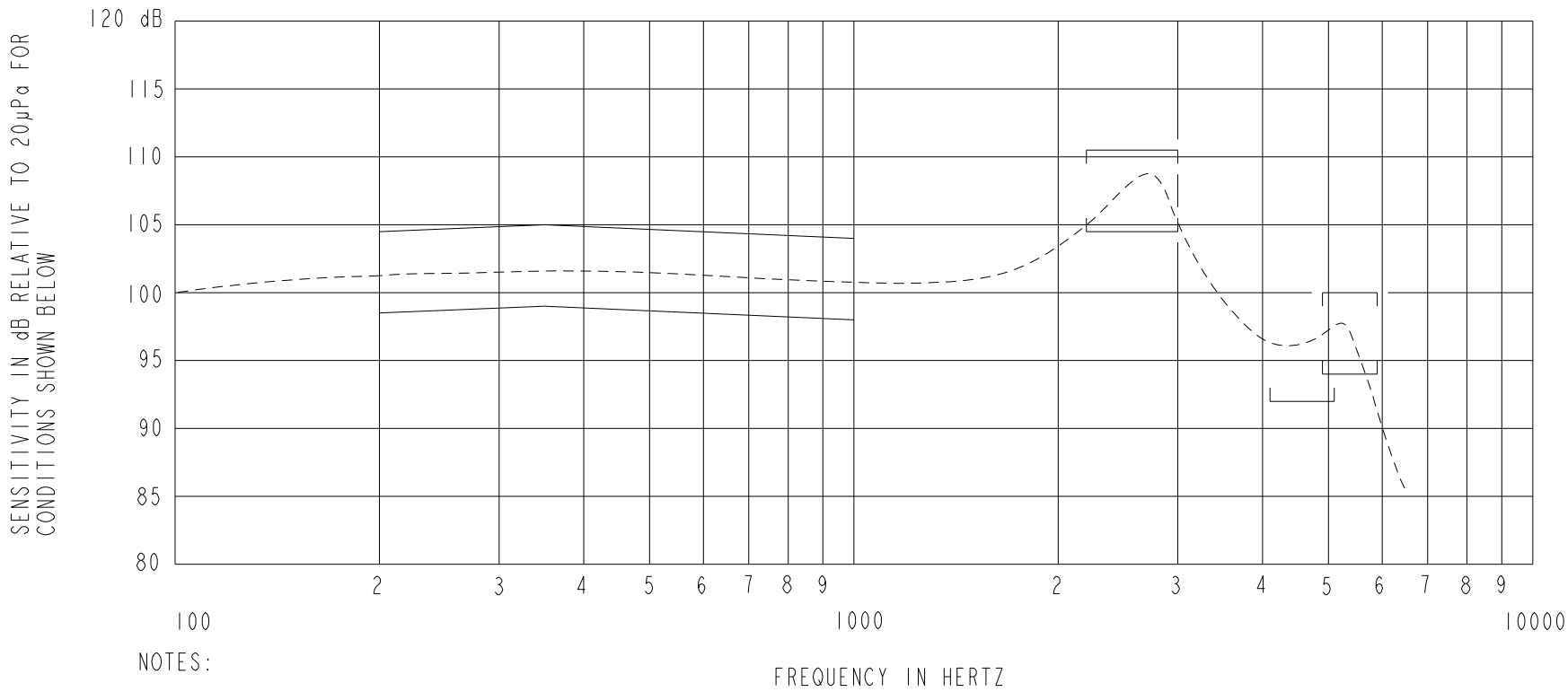

NOTES:

1. MEASUREMENTS MADE USING 10mm (.394") OF 1mm (.039") ID TUBE CONNECTED TO A SIMULATED ANSI S3.7 TYPE HA-3 COUPLER. (IEC 60318-5)

2. ELECTRICAL SIGNAL (SEE #5 BELOW).

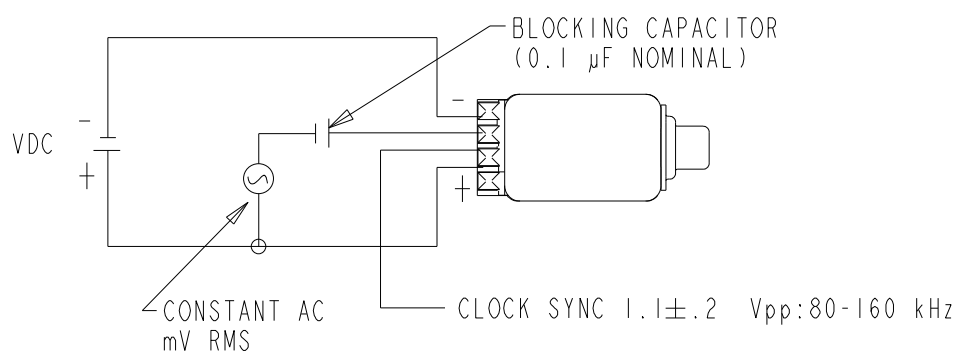

3. SENSITIVITY

FREQUENCY	MIN.	MAX.
200	98.5	104.5
350	99.0	105.0
1000	98.0	104.0
2200-3000	104.5	110.5
4100-5100	92.0	---
4900-5900	94.0	100.0

4. RESPONSE, IMPEDANCE, AND DISTORTION MEASUREMENTS MADE USING THE ELECTRICAL TEST CONDITIONS SHOWN BELOW.

5. INDIVIDUAL SPECIFICATIONS.

PORT LOCATION	MAX. DC SUPPLY CURRENT, mA		DISTORTION		ELECTRICAL TEST CONDITIONS	
	VDC= 1.3	VDC= 1.5	MAX. %	FREQ Hz	CONSTANT AC mV RMS	VDC
12C	0.375	0.575	5	800	25	1.3

Revision	C.O. #	Implementation Date	RELEASE LEVEL	REVISION
			Active	D
D	P10001062	12-19-16		

KNOWLES CORPORATION

WHEN TEST LIMITS ARE USED TO ESTABLISH INCOMING INSPECTION ACCEPTANCE/REJECTION CRITERIA, CORRELATION OF TEST EQUIPMENT WITH KNOWLES IS ALSO REQUIRED FOR ELIMINATION OF EQUIPMENT AND TEST METHOD VARIATION

DR. BY	DATE
AB	12-15-05
CK. BY	DATE
GJP	12-21-05
APP. BY	DATE
GJP	12-21-05

TITLE: RECEIVER PERFORMANCE SPECIFICATION

ES-23207-000 SHT 2.1